V_{DRM}	=	4500	V
I_{TGQM}	=	5500	A
I_{TSM}	=	33×10^3	A
$V_{(T0)}$	=	1.3	V
r_T	=	0.26	mW
$V_{DC\text{-}link}$	=	2800	V

Asymmetric Integrated Gate-Commutated Thyristor

5SHY 55L4500

PRELIMINARY

Doc. No. 5SYA1243-01 Aug 07

- **High snubberless turn-off rating**
- **Optimized for medium frequency (<1 kHz)**
- **High electromagnetic immunity**
- **Simple control interface with status feedback**
- **AC or DC supply voltage**
- **Option for series connection (contact factory)**

www.DataSheet4U.com

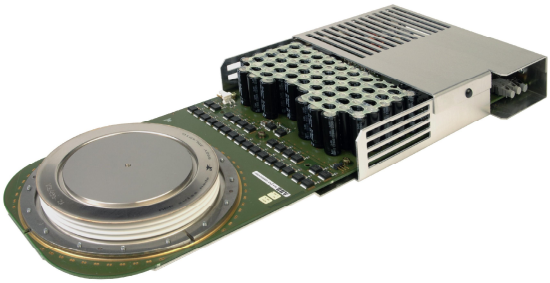

Blocking

Maximum rated values [1)]

Parameter	Symbol	Conditions	min	typ	max	Unit
Rep. peak off-state voltage	V_{DRM}	Gate Unit energized, Note 1			4500	V
Permanent DC voltage for 100 FIT failure rate of GCT	$V_{DC\text{-}link}$	Ambient cosmic radiation at sea level in open air. Gate Unit energized			2800	V
Reverse voltage	V_{RRM}				17	V

Characteristic values

Parameter	Symbol	Conditions	min	typ	max	Unit
Rep. peak off-state current	I_{DRM}	$V_D = V_{DRM}$, Gate Unit energized			50	mA

Mechanical data (see Fig. 11, 12)

Maximum rated values [1)]

Parameter	Symbol	Conditions	min	typ	max	Unit
Mounting force	F_m		36	40	44	kN

Characteristic values

Parameter	Symbol	Conditions	min	typ	max	Unit
Pole-piece diameter	D_p	± 0.1 mm		85		mm
Housing thickness	H		25.3		25.8	mm
Weight	m				2.9	kg
Surface creepage distance	D_s	Anode to Gate	33			mm
Air strike distance	D_a	Anode to Gate	10			mm
Length	l	± 1.0 mm		439		mm
Height	h	± 1.0 mm		40		mm
Width IGCT	w	± 1.0 mm		173		mm

1) Maximum rated values indicate limits beyond which damage to the device may occur

ABB Switzerland Ltd, Semiconductors reserves the right to change specifications without notice.

www.DataSheet4U.com

GCT Data

On-state (see Fig. 3, 4, 5, 6, 14, 15)

Maximum rated values [1)]

Parameter	Symbol	Conditions	min	typ	max	Unit
Max. average on-state current	$I_{T(AV)M}$	Half sine wave, T_C = 85 °C, Double side cooled			1880	A
Max. RMS on-state current	$I_{T(RMS)}$				2950	A
Max. peak non-repetitive surge on-state current	I_{TSM}	t_p = 3 ms, Tj = 125 °C, sine wave after surge: $V_D = V_R$ = 0 V			50×10^3	A
Limiting load integral	I^2t				3.75×10^6	A^2s
Max. peak non-repetitive surge on-state current	I_{TSM}	t_p = 10 ms, Tj = 125 °C, sine wave after surge: $V_D = V_R$ = 0 V			33×10^3	A
Limiting load integral	I^2t				54.5×10^6	A^2s
Max. peak non-repetitive surge on-state current	I_{TSM}	t_p = 30 ms, Tj = 125 °C, sine wave after surge: $V_D = V_R$ = 0 V			22×10^3	A
Limiting load integral	I^2t				7.26×10^6	A^2s
Stray inductance between GCT and antiparallel diode	L_D	Only relevant for applications with antiparallel diode to the IGCT			300	nH
Critical rate of rise of on-state current	di_T/dt_{cr}	For higher di_T/dt and current lower than 100 A an external retrigger puls is required.			200	A/µs

Characteristic values

Parameter	Symbol	Conditions	min	typ	max	Unit
On-state voltage	V_T	I_T = 4000 A, T_j = 125 °C		2.15	2.35	V
Threshold voltage	$V_{(T0)}$	T_j = 125 °C, I_T = 1000...6000 A		1.25	1.3	V
Slope resistance	r_T			0.23	0.26	mΩ

Turn-on switching (see Fig. 14, 15)

Maximum rated values [1)]

Parameter	Symbol	Conditions	min	typ	max	Unit
Critical rate of rise of on-state current	di_T/dt_{cr}	f = 0..500 Hz, T_j = 125 °C, I_T = 5000 A, V_D = 2800 V, $I_{TM} \leq$ 7000 A			1000	A/µs

Characteristic values

Parameter	Symbol	Conditions	min	typ	max	Unit
Turn-on delay time	t_{don}	V_D = 2800 V, T_j = 125 °C, I_T = 4000 A, di/dt = V_D / L_i, L_i = 3 µH, C_{CL} = 20 µF, L_{CL} = 0.3 µH			4	µs
Turn-on delay time status feedback	$t_{don\ SF}$				7	µs
Rise time	t_r				1	µs
Turn-on energy per pulse	E_{on}				1.8	J

Turn-off switching (see Fig. 7, 8, 10, 14, 15)

Maximum rated values [1)]

Parameter	Symbol	Conditions		min	typ	max	Unit
Max. controllable turn-off current	I_{TGQM1}	$V_{DM} \leq V_{DRM}$, T_j = 125°C, R_S = 0.35 Ω, C_{CL} = 20 µF, $_{DRM}L_{CL}$ ≤ 0.3 µH	V_D = 2800 V, t_{on} > 100µs			5500	A
Max. controllable turn-off current	I_{TGQM2}		V_D = 2800 V, 40µs < t_{on} < 100µs			5000	A

Characteristic values

Parameter	Symbol	Conditions	min	typ	max	Unit
Turn-off delay time	t_{doff}	V_D = 2800 V, T_j = 125 °C, $V_{DM} \leq V_{DRM}$, R_S = 0.35 Ω, I_{TGQ} = 4000 A, L_i = 3 µH, C_{CL} = 20 µF, L_{CL} = 0.3 µH			7	µs
Turn-off delay time status feedback	$t_{doff\ SF}$				7	µs
Turn-off energy per pulse	E_{off}			26	tbd	J

www.DataSheet4U.com

Gate Unit Data

Power supply (see Fig. 2, 9, 10, 12, 13)

Maximum rated values [1)]

Parameter	Symbol	Conditions	min	typ	max	Unit
Gate Unit voltage (Connector X1)	$V_{GIN,RMS}$	AC square wave amplitude (15 kHz - 100kHz) or DC voltage. No galvanic isolation to power circuit.	28		40	V
Min. current needed to power up the Gate Unit	$I_{GIN\ Min}$	Rectified average current see application note 5SYA 2031	2			A
Gate Unit power consumption	$P_{GIN\ Max}$				130	W

Characteristic values

Parameter	Symbol	Conditions	min	typ	max	Unit
Internal current limitation	$I_{GIN\ Max}$	Rectified average current limited by the Gate Unit			8	A

www.DataSheet4U.com

Optical control input/output [2)]

Maximum rated values [1)]

Parameter	Symbol	Conditions	min	typ	max	Unit
Min. on-time	t_{on}		40			µs
Min. off-time	t_{off}		40			µs

Characteristic values

Parameter	Symbol	Conditions	min	typ	max	Unit
Optical input power	$P_{on\ CS}$	CS: Command signal SF: Status feedback Valid for 1mm plastic optical fiber (POF)	-15		-1	dBm
Optical noise power	$P_{off\ CS}$				-45	dBm
Optical output power	$P_{on\ SF}$		-19		-1	dBm
Optical noise power	$P_{off\ SF}$				-50	dBm
Pulse width threshold	t_{GLITCH}	Max. pulse width without response			400	ns
External retrigger pulse width	t_{retrig}		600		1100	ns

2) Do not disconnect or connect fiber optic cables while light is on.

Connectors [2)] (see Fig. 11, 12, 13)

Parameter	Symbol	Description
Gate Unit power connector	X1	AMP: MTA-156, Part Number 641210-5 [3)]
LWL receiver for command signal	CS	Avago, Type HFBR-2528 [4)]
LWL transmitter for status feedback	SF	Avago, Type HFBR-1528 [4)]

2) Do not disconnect or connect fiber optic cables while light is on.
3) AMP, www.amp.com
4) Avago Technologies, www.avagotech.com

Visual feedback (see Fig. 13)

Parameter	Symbol	Description	Color
Gate OFF	LED1	"Light" when GCT is off	(green)
Gate ON	LED2	"Light" when gate-current is flowing	(yellow)
Fault	LED3	"Light" when not ready / Failure	(red)
Power supply voltage OK	LED4	"Light" when power supply is within specified range	(green)

Thermal

Maximum rated values [1)]

Parameter	Symbol	Conditions	min	typ	max	Unit
Junction operating temperature	T_{vj}		0		125	°C
Storage temperature range	T_{stg}		0		60	°C
Ambient operational temperature	T_a		0		50	°C

Characteristic values

Parameter	Symbol	Conditions	min	typ	max	Unit
Thermal resistance junction-to-case of GCT	$R_{th(j-c)}$	Double side cooled			8.5	K/kW
Thermal resistance case-to-heatsink of GCT	$R_{th(c-h)}$	Double side cooled			3	K/kW

www.DataSheet4U.com

Analytical function for transient thermal impedance:

$$Z_{th(j-c)}(t) = \sum_{i=1}^{n} R_i(1 - e^{-t/\tau_i})$$

i	1	2	3	4
R_i(K/kW)	5.562	1.527	0.868	0.545
τ_i(s)	0.5119	0.0896	0.0091	0.0024

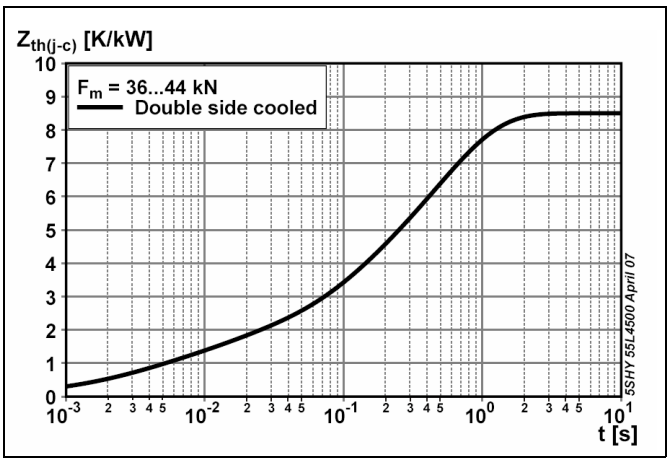

Fig. 1 Transient thermal impedance (junction-to-case) vs. time (max. values)

Max. Turn-off current for Lifetime operation

- calculated lifetime of on-board capacitors 20 years
- with slightly forced air cooling (air velocity > 0.5 m/s)
- strong air cooling allows for increased ambient temperature

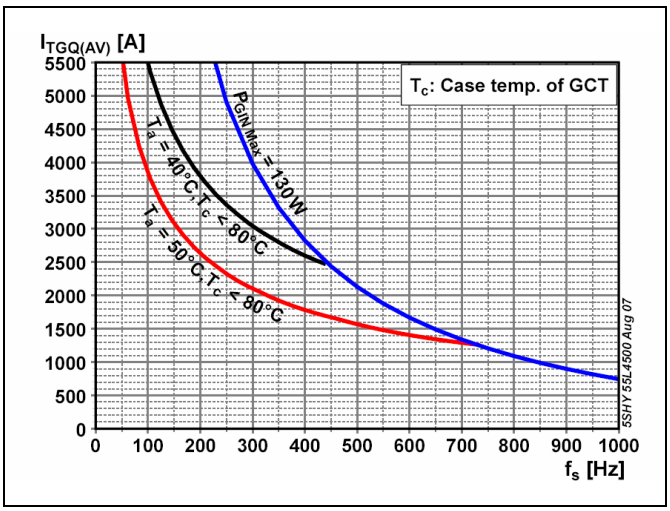

Fig. 2 Max. turn-off current vs. frequency for lifetime operation

Max. on-state characteristic model:

$$V_{T25} = A_{Tvj} + B_{Tvj} \cdot I_T + C_{Tvj} \cdot \ln(I_T + 1) + D_{Tvj} \cdot \sqrt{I_T}$$

Valid for i_T = 300 – 30000 A

	A_{25}	B_{25}	C_{25}	D_{25}
Max.	143.3×10^{-3}	122.7×10^{-6}	167.3×10^{-3}	0.0
Typ.	131.1×10^{-3}	112.3×10^{-6}	153.1×10^{-3}	0.0

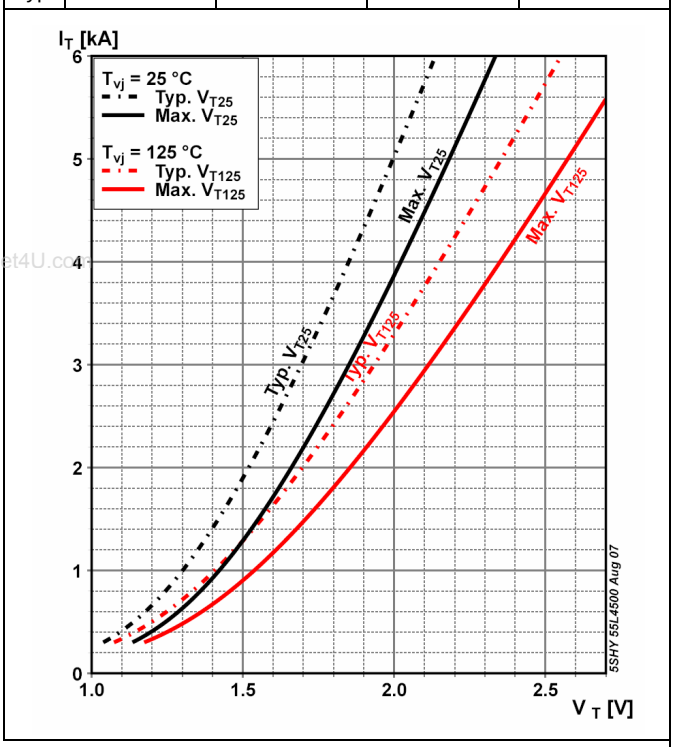

Fig. 3 GCT on-state voltage characteristics

Max. on-state characteristic model:

$$V_{T125} = A_{Tvj} + B_{Tvj} \cdot I_T + C_{Tvj} \cdot \ln(I_T + 1) + D_{Tvj} \cdot \sqrt{I_T}$$

Valid for i_T = 300 – 30000 A

	A_{125}	B_{125}	C_{125}	D_{125}
Max.	-13.0×10^{-3}	179.2×10^{-6}	198.5×10^{-3}	0.0
Typ.	-11.9×10^{-3}	163.9×10^{-6}	181.7×10^{-3}	0.0

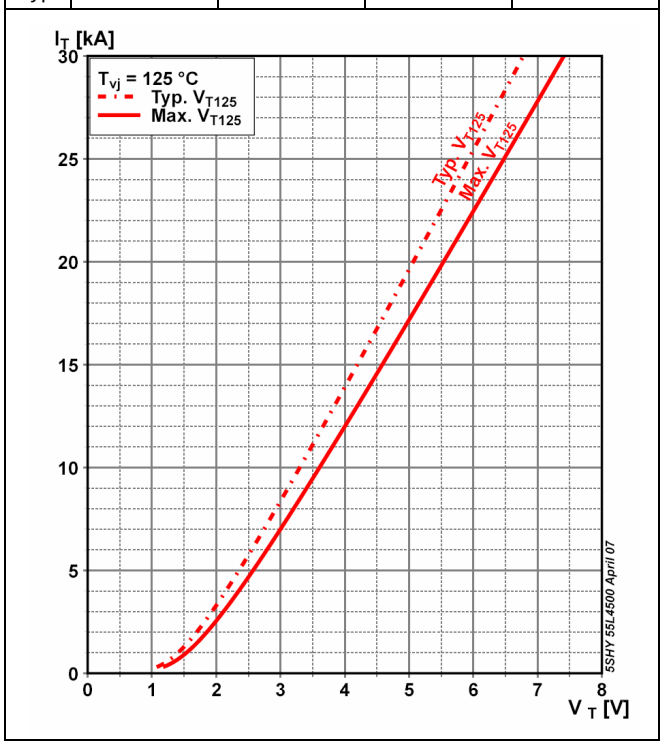

Fig. 4 GCT on-state voltage characteristics

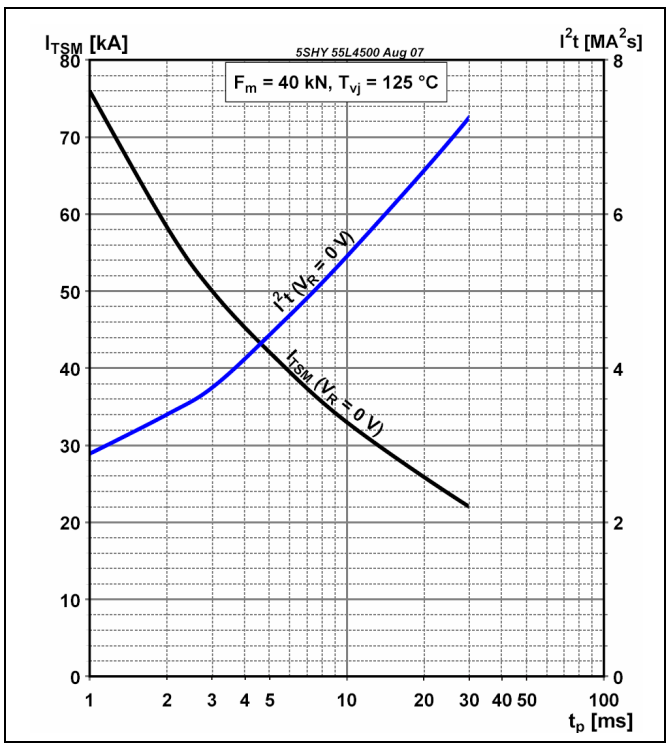

Fig. 5 Surge on-state current vs. pulse length, half-sine wave

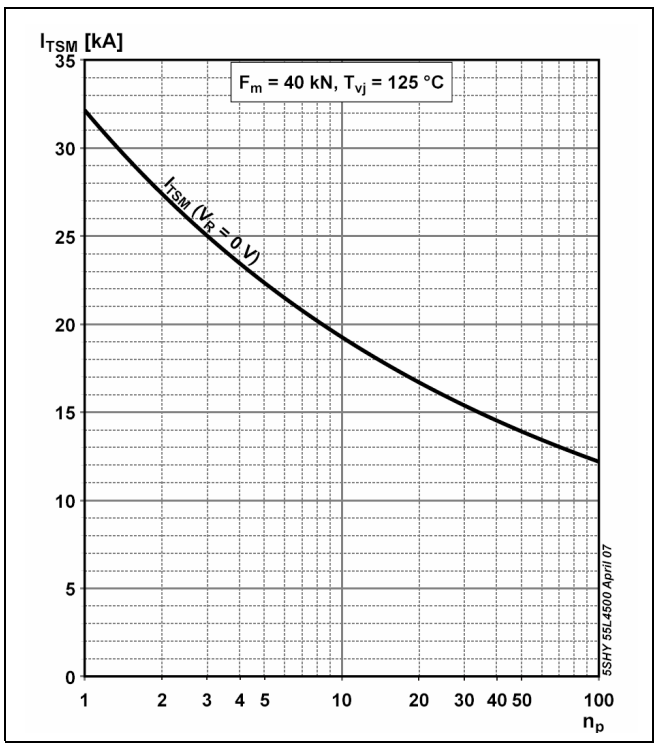

Fig. 6 Surge on-state current vs. number of pulses, half-sine wave, 10 ms, 50 Hz

www.DataSheet4U.com

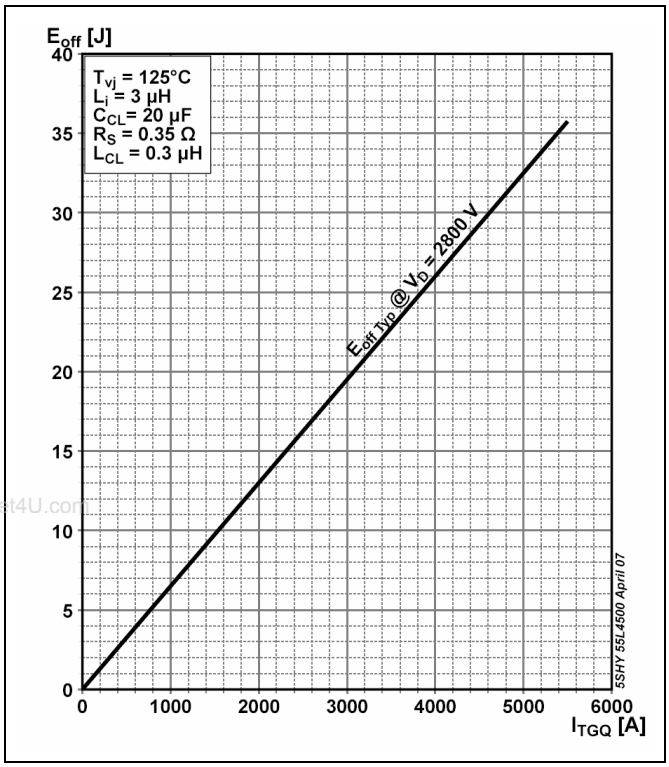

Fig. 7 GCT turn-off energy per pulse vs. turn-off current

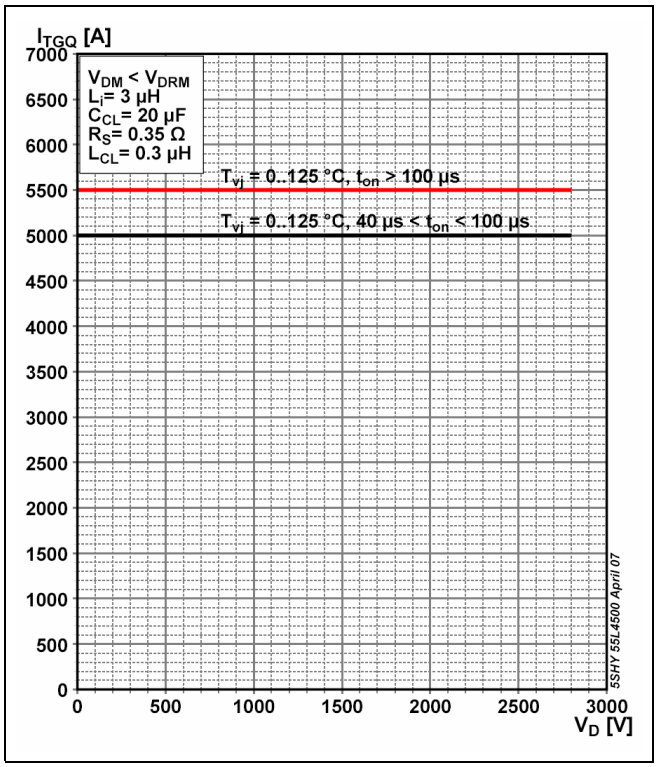

Fig. 8 Safe Operating Area

www.DataSheet4U.com

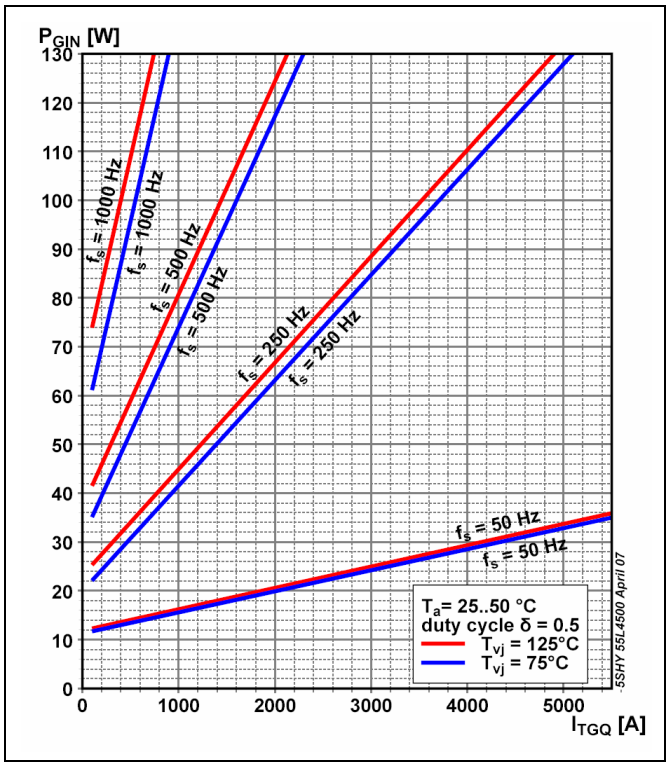

Fig. 9 Max. Gate Unit input power in chopper mode

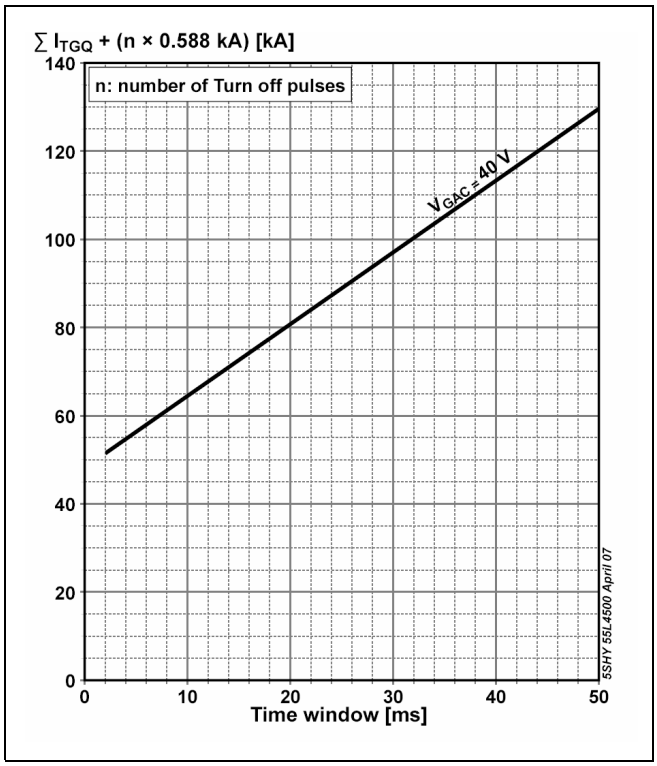

Fig. 10 Burst capability of Gate Unit

www.DataSheet4U.com

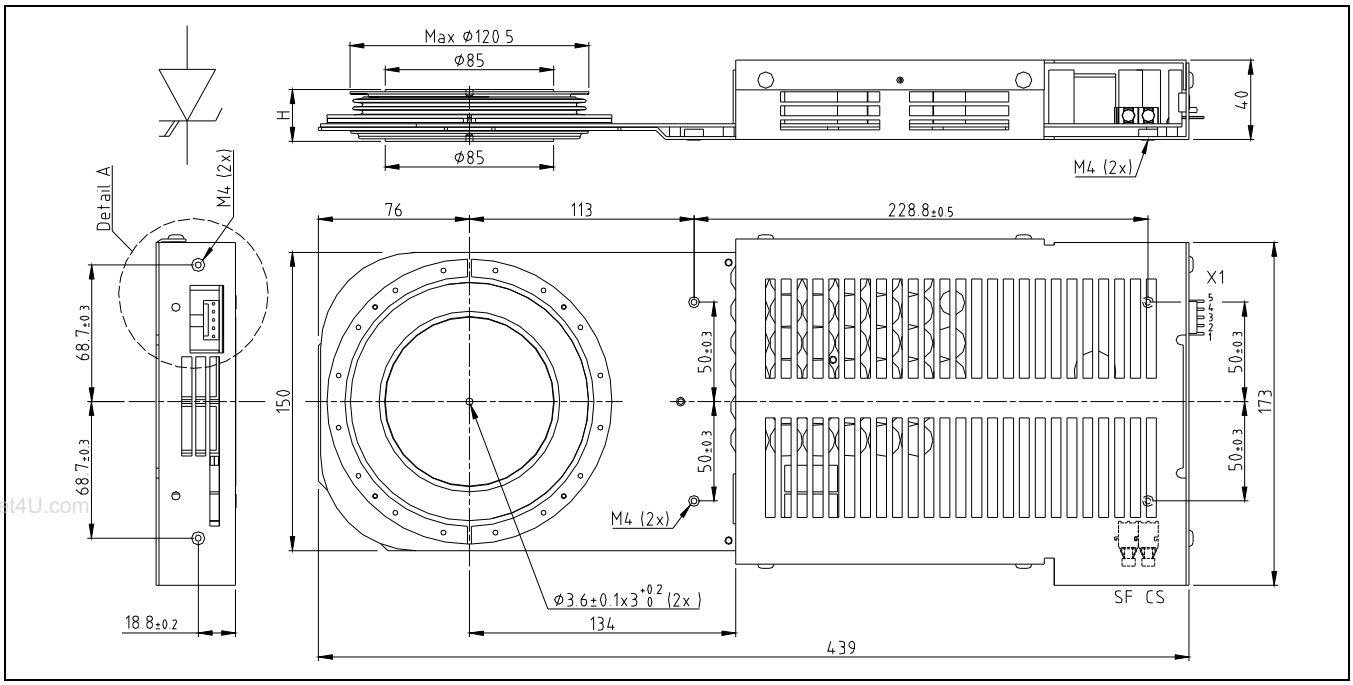

Fig. 11 Outline drawing; all dimensions are in millimeters and represent nominal values unless stated otherwise

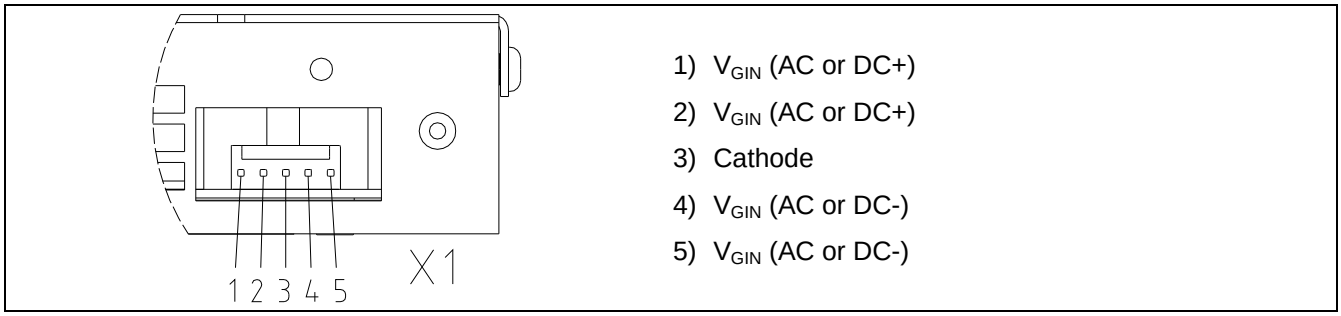

Fig. 12 Detail A: pin out of supply connector X1

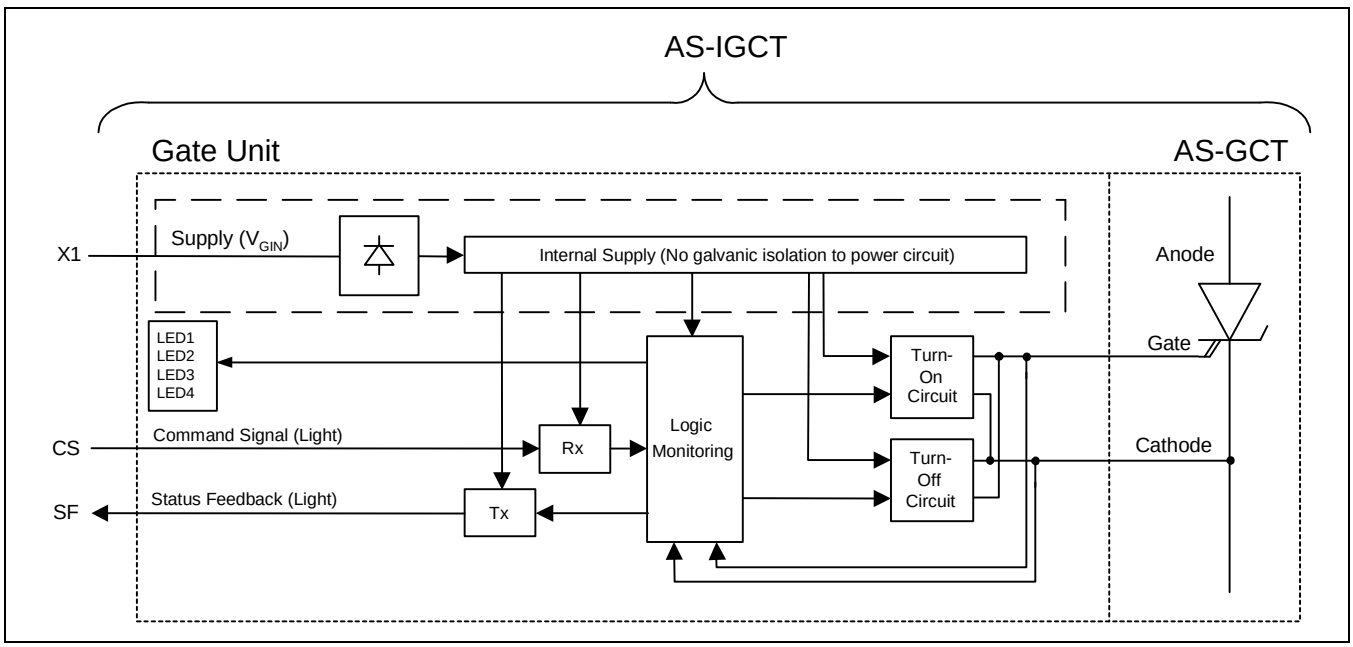

Fig. 13 Block diagram

www.DataSheet4U.com

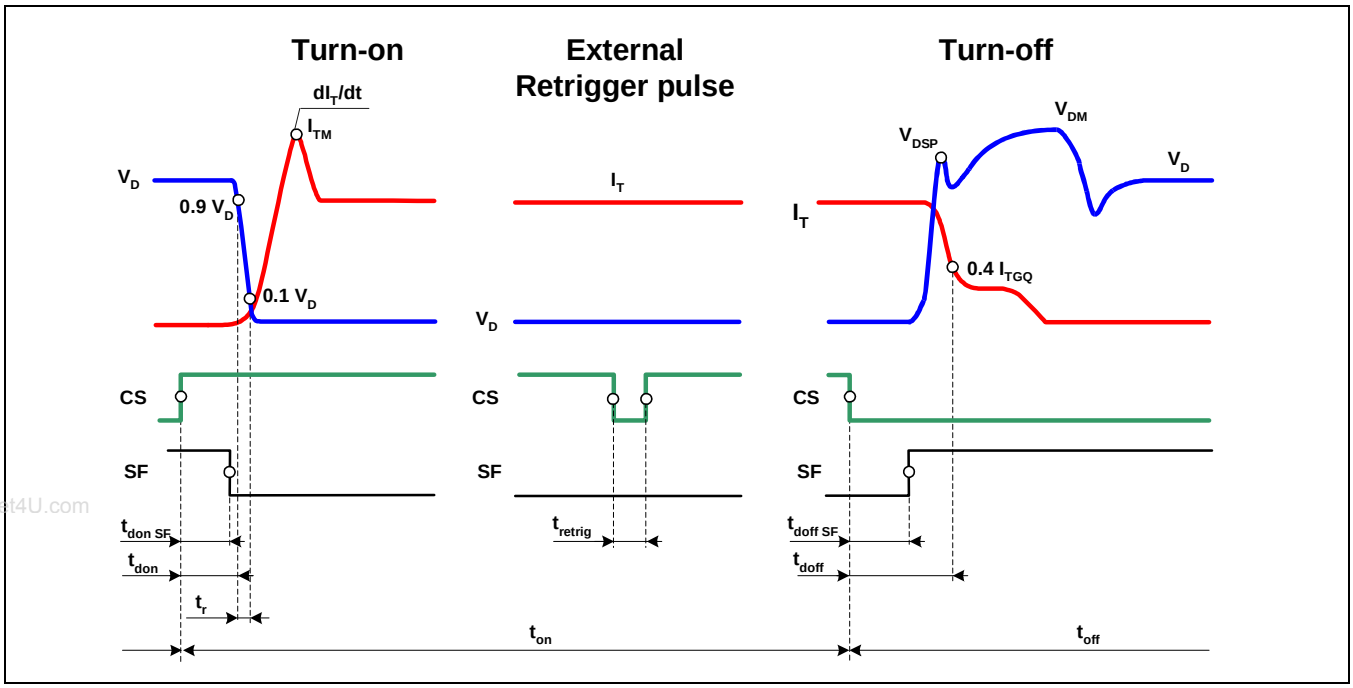

Fig. 14 General current and voltage waveforms with IGCT - specific symbols

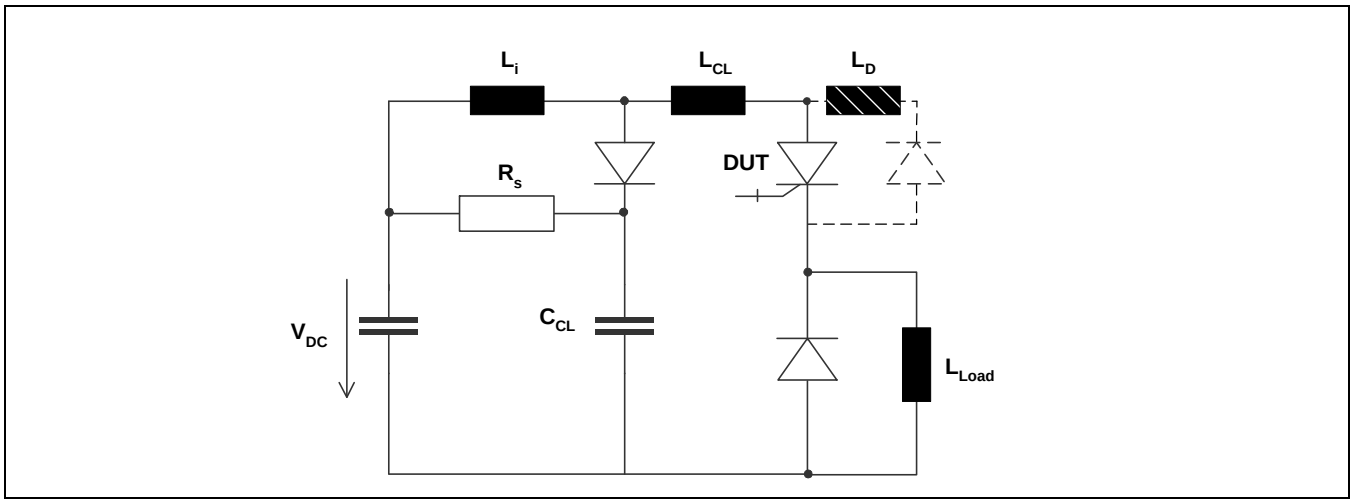

Fig. 15 Test circuit

www.DataSheet4U.com

www.DataSheet4U.com

Related documents:

5SYA 2031	Applying IGCT Gate Units
5SYA 2032	Applying IGCTs
5SYA 2036	Recommendations regarding mechanical clamping of Press Pack High Power Semiconductors
5SYA 2046	Failure rates of IGCTs due to cosmic rays
5SYA 2048	Field measurements on High Power Press Pack Semiconductors
5SYA 2051	Voltage ratings of high power semiconductors
5SZK 9107	Specification of enviromental class for pressure contact IGCTs, OPERATION available on request, please contact factory

Please refer to http://www.abb.com/semiconductors for current version of documents.

www.DataSheet4U.com

ABB Switzerland Ltd, Semiconductors reserves the right to change specifications without notice.

ABB Switzerland Ltd
Semiconductors
Fabrikstrasse 3
CH-5600 Lenzburg, Switzerland

Telephone +41 (0)58 586 1419
Fax +41 (0)58 586 1306
Email abbsem@ch.abb.com
Internet www.abb.com/semiconductors

Doc. No. 5SYA1243-01 Aug 07

www.DataSheet4U.com